6 mm LIGHT DUTY DRILL TYPE EG2c-H
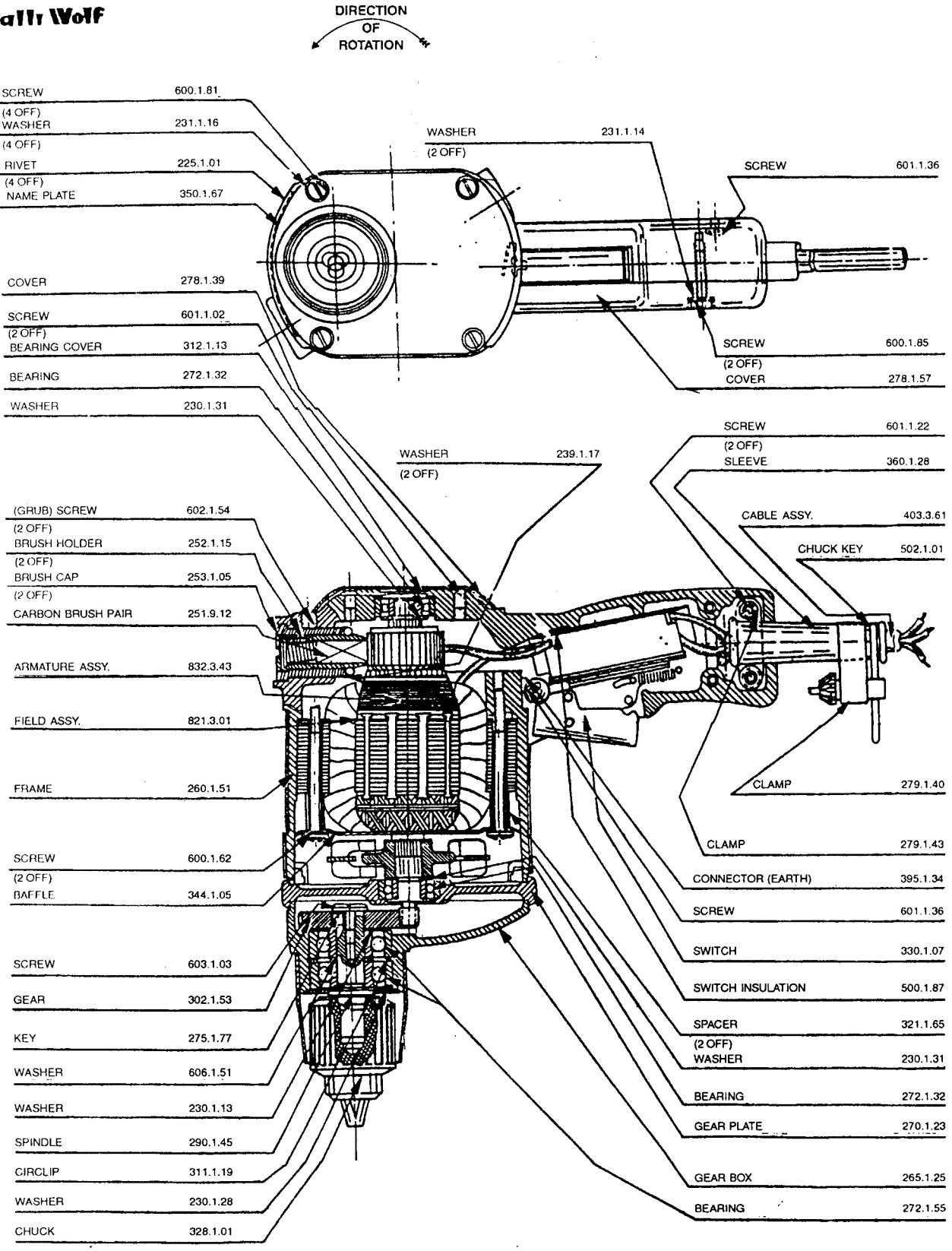
Rally Wolf